2MP Auto Iris Vari-focal LENS

VG05100MP2IR

FEATURES

Lens Brand ZLKC

1/2.7″CS-Mount 5-100mm 2MP

HD Format,Bigger aperture F1.6

Assured excellent light intensity

Achromatic optical system design

Precise Focus Adjustment

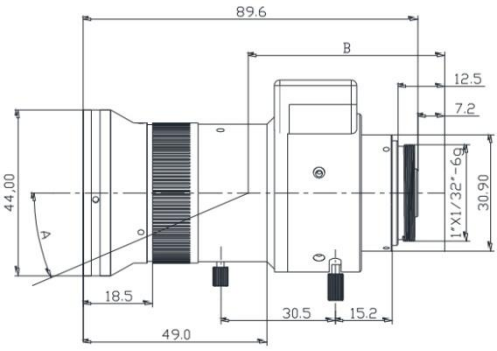

SPECIFICATION

		—
		Φ